ZOOMLION

ARTICULATING BOOM LIFT

ZA14J

Comply with CE/ANSI/CSA Standard

HIGHLIGHTS



- 300kg platform capacity for higher efficiency
- Build-in multiple pressure control leveling system to enhance stability
- Precise load sensing system to improve overload safety operations
- Integrated with rotary reducer to enhance rotation stability
- Hostile Kits available for dusty working environment
- Deadweight Lowering System for smooth operation and energy efficiency

FEATURES

Standard Features

Horn
All motion alarm
Proportional control
Self-closing entry gate
Flashing beacon
Auto-leveling system
Emergency stop button
Over tilt protection system
Emergency descent system
On-board diagnostic system
Oscillating axle
4.3' LED display
Load sensing system
Swing-out engine tray

Accessories & Options

- Platform work lights
- Anti-collision device
- AC power to platform

ACCESS WITH ZOOMLION GREEN

Phone: 0086(731)-88353692
E-mail: awp@zoomlion.com

Add: 701 Xulong Nan Lu, Xiangjiang New District, Changsha Hunan, China
Web: www.zoomlion-access.com

ZOOMLION

Model	ZA14J	
	Imperial	Metric
Size		
Work Height	51ft 10in	15.80m
Platform Height	45ft 3in	13.80m
Horizontal Outreach	27ft 3in	8.30m
Up and Over Height	24ft 9in	7.55m
A - Stowed Length	21ft 7in	6.57m
B - Stowed Width	7ft 7in	2.30m
C - Stowed Height	7ft 5in	2.27m
D - Platform Length	6ft	1.83m
E - Platform Width	2ft 6in	0.76m
Jib Length	4ft 1in	1.24m
F - Wheelbase	7ft 9in	2.36m
G - Ground Clearance	1ft 5in	0.42m
Performance		
Platform Capacity	660 lb	300kg
Drive Speed	4.23 mph	6.8km/h
Gradeability	45%(24°)	45%(24°)
Axles Oscillation	4in	0.1m
Turning Radius (Inside)	6ft 9in	2.06m
Turning Radius (Outside)	15ft 8in	4.78m
Swing	355° non-continuous	
Platform Rotation	±90°	
H-Tail Swing	0	
Max. Wind Speed	28mph	12.5m/s
Power		
Diesel Engine	Kubota V2403 36kw/2600rpm(China III) Kubota V2403 36.8kw/2700rpm(Euro V) Weichai WP3.2 36.8kw/2500rpm (China IV)	
Fuel Tank Capacity	17.2 (us gal)	65L
Auxiliary Power	12V	
Control Voltage	12V	
Hydraulic System Capacity	39.6 (us gal)	150L
Hydraulic Tank Capacity	20.1 (us gal)	76L
Drive	4WD	
Tire		
Type	315/55 D20 Foam-filled Tires 33×12-20 Solid Tires	
Weight		
Gross	15653 lb	7100kg

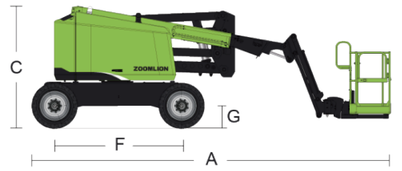



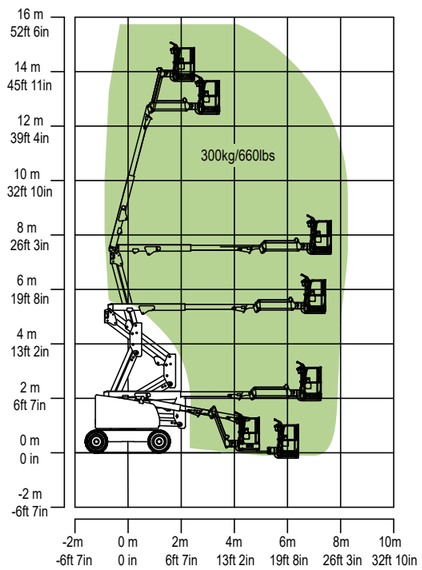

Range of Motion ZA14J

ZOOMLION ACCESS reserves the right to make specification and/or equipment changes without prior notification.
Product specifications are updated to January, 2025.